INSTRUCTIONS FOR USE

IFU CODE : 28

İB-ER
PROSTHETIC



AKS-Valve

CE

Fig 1.

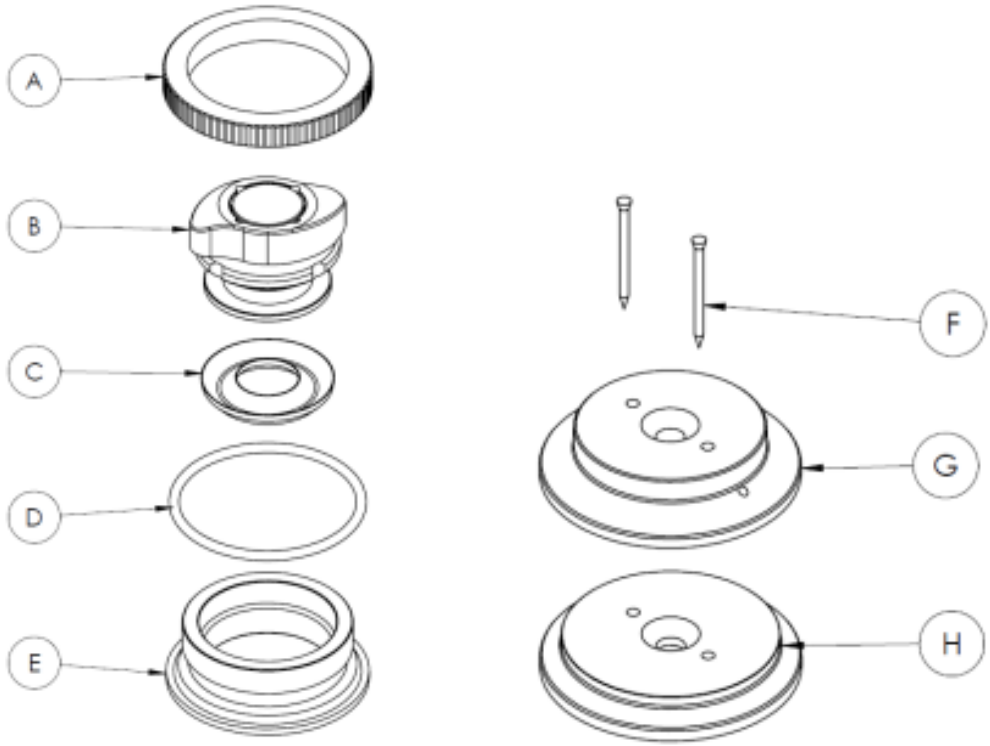

Fig 2.

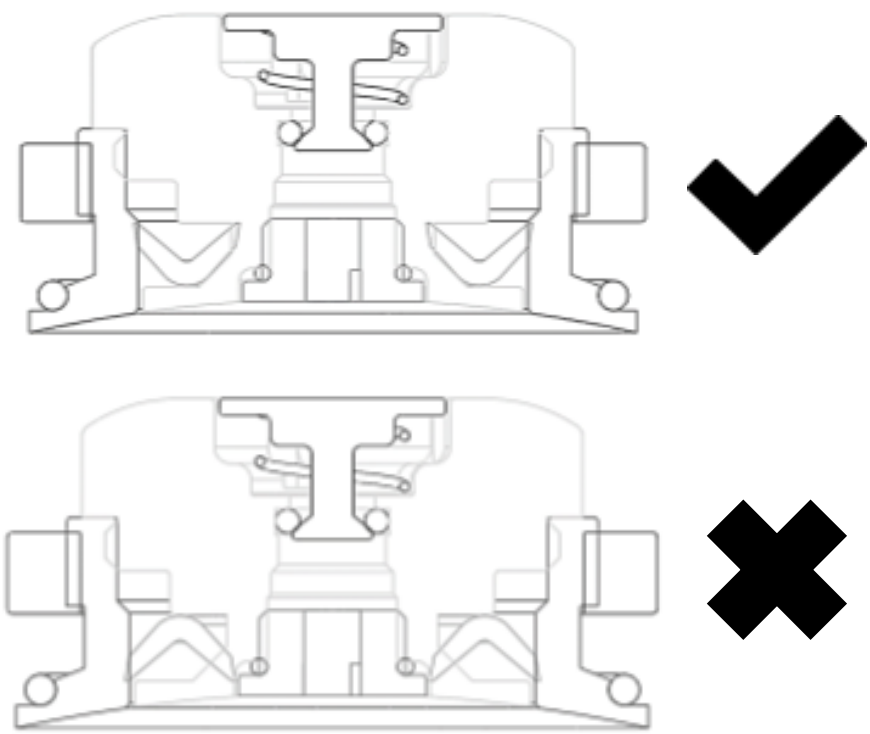

INFORMATION

Last Update: 01.12.2023

- Please read this document carefully before using the product.
- Instruct the user in the appropriate and safe use of the product.
- Follow the safety instructions to abstain injuries and damage to the product.
- Please keep this document in a safe place.

Contents

1 Description & Functions 1

2 Assembly 1

3 Cleaning & Maintenance 3

4 Environmental Conditions 4

5 Service Life 4

6 General Safety Instructions 4

7 Warranty 5

1 Description & Functions

Aks-Valve is an Auto-Expulsion Valve with air release button. The valve expels air under the pressure when the stump entering into the socket. Designed to be used with all suction suspension systems. This product is recommended for Transfemoral users. Product package includes the dummy parts.

Code	Weight	Material
AKS-Valve	22 gr	Delrin

Part List (Fig. 1)

Part No	Part Name
A	Lock Ring
B	Valve Body
C	Membrane
D	O-Ring
E	Housing
F	Nails
G	Long Dummy
H	Short Dummy

2 Assembly

CAUTION!

For flexible inner sockets choose LONG (G) dummy.

For rigid socket choose SHORT (H) dummy.

Cast rectification

1. Determine the Valve location on the plaster model and level the area to ensure the Dummy sits flush. Make a mark in the center hole of the dummy on the plaster model with an indelible marker.
2. Drill a 2 mm vacuum hole using a long drill.
3. Attach the Dummy to the plaster model using the Nails provided.

Preparation for laminated sockets

1. Place the first PVA bag over the plaster model with the model in place.
2. Place the reinforcement layers and the second PVA bag on the dummy. Apply vacuum after mixing the resin. Thus, the trapped air will be removed. Pour the resin.

Preparation for thermoplastic sockets

1. Cover the thermoplastic socket.
2. Route the plastic around the dummy to ensure proper molding.

Finishing and installation

1. For the part where the dummy is located, grind the material until a completely flat area emerges. Continue this process until you reveal the Dummy.
2. Remove the Dummy and install the housing with O-ring.
3. Hand tighten the Lock Ring (A) firmly into the housing.

ATTENTION!

Make sure that the O-ring is not visible when viewed from inside the socket.

3 Cleaning & Maintenance

Clean with a damp cloth and a mild soap. Dry with a cloth after cleaning.

Clean with fresh water after exposure to other liquids, chemicals, sand, dust, or dirt and dry with a cloth.

Disassembly and cleaning

1. Unscrew Valve and remove the Membrane.
2. Clean under running water with mild detergent and clear airways with an air hose. Hold down the button in the cap while clearing airway.

Reassembly

Replace the membrane with the convex surface facing down (Fig. 2).

ATTENTION!

The product and the overall prosthesis should be examined by a healthcare professional. The examination interval should be determined according to patient activity.

4 Environmental Conditions

Acceptable Environmental Conditions
Temperature use range: -10 °C to +45°C
Humidity: Allowable relative humidity 20 % to 90 %, non-condensing

Unsuitable Environmental Conditions
Mechanical vibrations, impacts
Dust, sand, fresh water, salt water, acids, sweat and urine
Cleaning agents containing solvents

5 Service Life

The service life of the product is about 3 years. This duration depends on the daily activity of the user.

6 General Safety Instructions

CAUTION! To avoid the risk of injury and product damage, do not use for longer than the service life of the product.
Avoid using this product in unsuitable environmental conditions. If the product has been exposed to unsuitable environmental conditions, check for damage.
Do not use the product that is damaged, has limited functionality or is in doubtful condition. Ensuring that appropriate measures are taken (e.g. control, cleaning, repair, replacement by the authorized workshop or manufacturer).
To prevent mechanical damage, be careful and caution when working the product.

Use the product for a single patient to avoid injuries and product damage.
Products should be used in appropriate combinations. Using the product in inappropriate combinations may result in possible injuries or failure of the valve.
If the valve cannot vent air, contact the rehabilitation center that installed the prosthesis.

7 Warranty

IB-ER company provides the warranty for the products in case of material and production flaws. The warranty period for the above mentioned product is indicated below.

Product Code	Duration After the IB-ER Invoice Date
AKS-Valve	12 Months

This warranty covers on only replacement and repair of failed products after assemblies performed by qualified individuals and competent institutions. This warranty is not applicable in case of following points:

- Improper use of the product, using with unsuitable conditions and fault assembly.
- Issues arising from replacement of our products with other products.

İB-ER®
PROSTHETIC

İB-ER Makina A.Ş
Selvilitepe OSB Mah. OSB 2006. Cad. No: 13/1
45400, Turgutlu - Manisa / Turkey

Phone : +90 (236) 312 32 00
Fax : +90 (236) 312 32 06
info@ib-er.com
www.ib-er.com

EC REP

Ercan Gozuacik
Reinickendorfer Str 45 13347 Berlin GERMANY
(for regulatory affairs only)