# INSTRUCTIONS FOR USE

# IFU CODE : 20

İB-ER
PROSTHETIC



**E 70 Series**



**E 71 Series**

# Shuttle Locks

CE

**Fig 1. (E 70-Kit)**

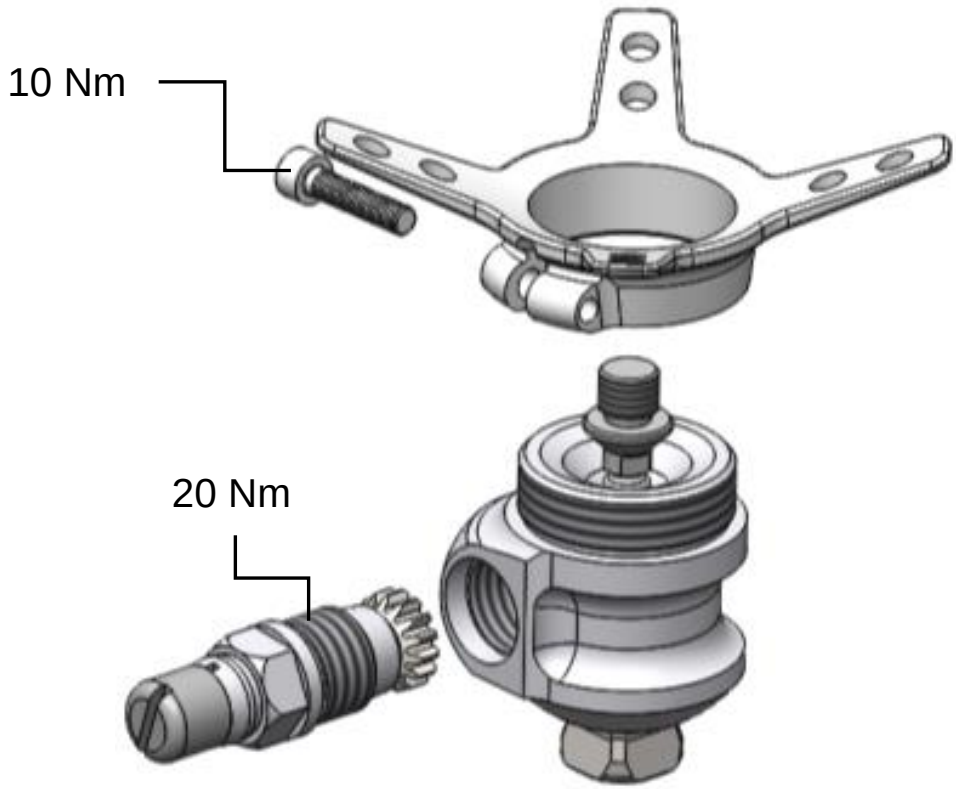


**Fig 2. (E 71-Kit)**

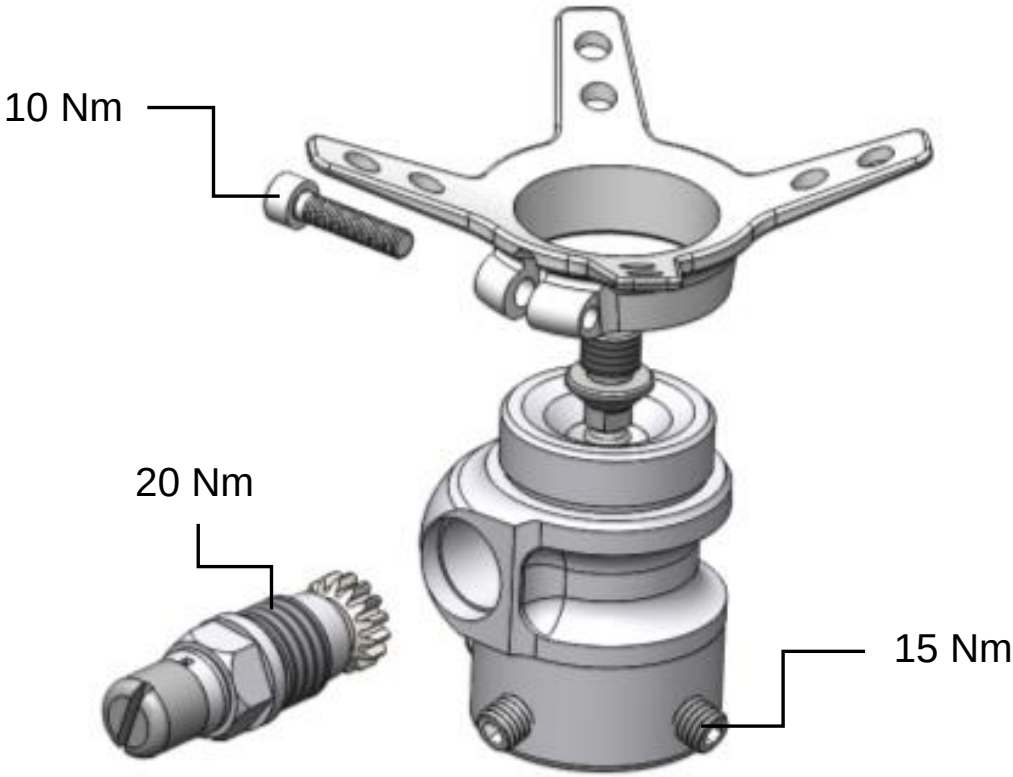

**Fig 3. (SL-Kit (Dummy Set))**

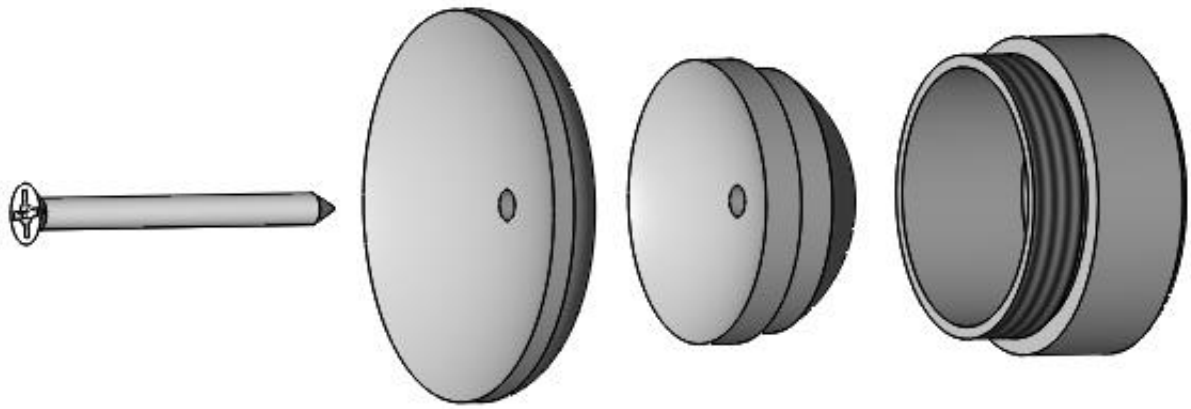

**Fig 4. (E 70-Gear)**



**Fig 5. (E 70-Pin)**



**Fig 6. Proper Functional Way of E 70 - E 71 Series**

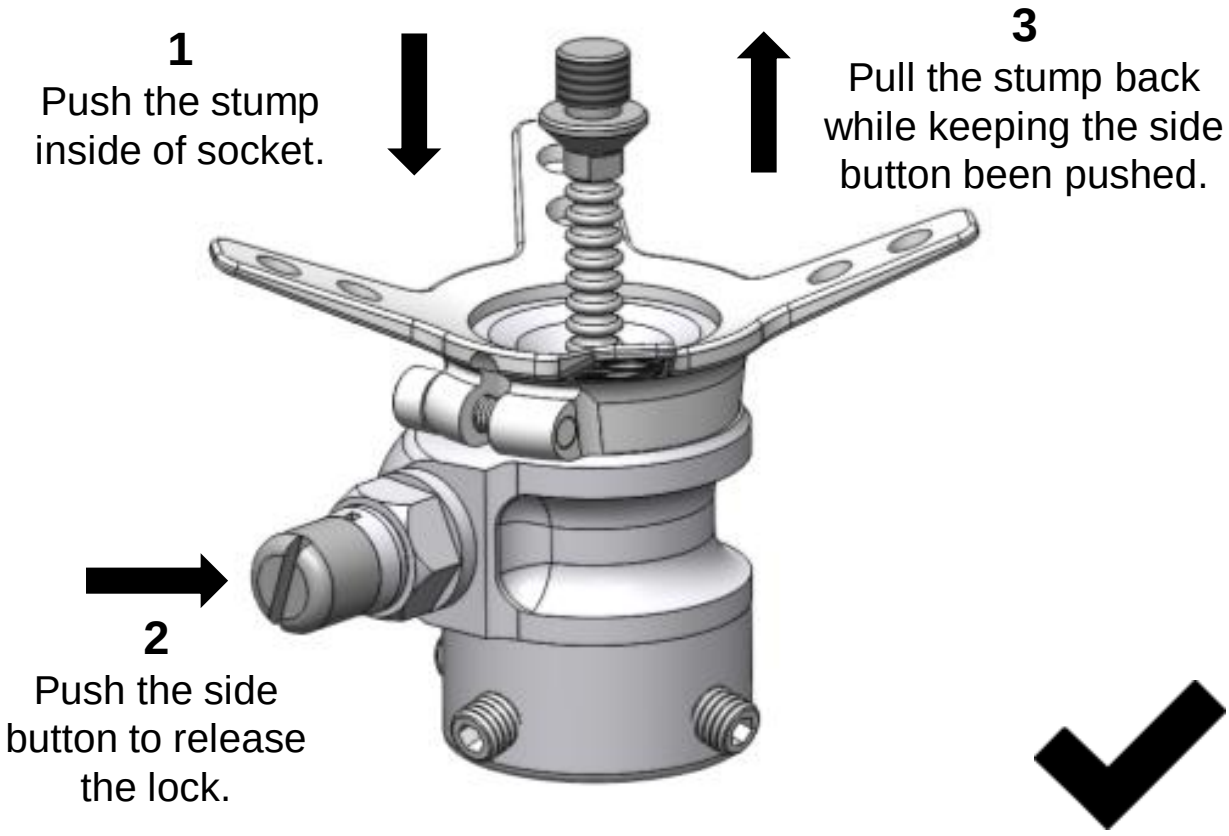


**Fig 7. Incorrect Usage of E 70 - E 71 Series**

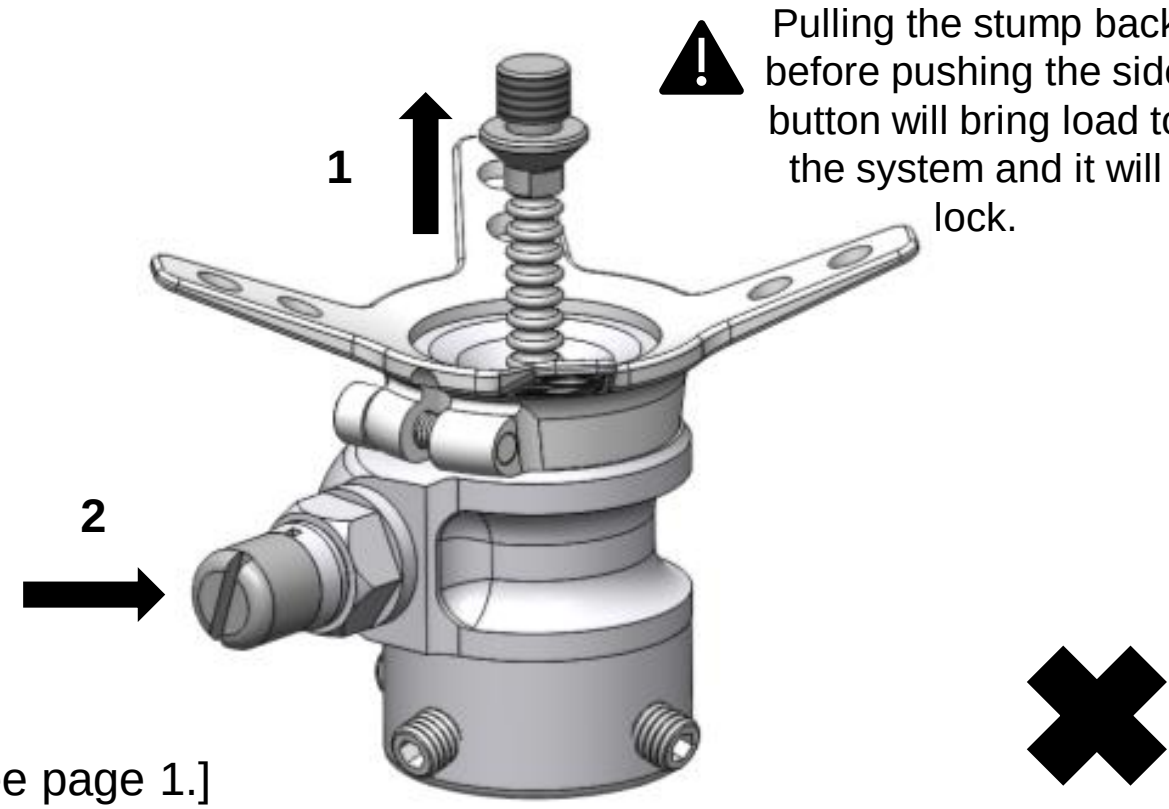


[See page 1.]

**INFORMATION**

Last Update: 01-01-2023

- Please read this document carefully before using the product.
- Instruct the user in the appropriate and safe use of the product.
- Follow the safety instructions to abstain injuries and damage to the product.
- Please keep this document in a safe place.

## Contents


1.Description and Functions ..... 1
2.Assembly ..... 3
3.Maintenance ..... 4
4.Scope of Delivery..... 4
5.Environmental Conditions..... 5
6.Service Life ..... 5
7.General Safety Instructions ..... 5
8.Warranty ..... 6

# 1.Description and Functions

E70 and E71 products are shuttle locks, which is designed for to use at BK and AK Prosthetics. They come together with the 3-Prong or 4-Prong socket adapter by the need of the patient.

Both of them are compatible with regular “silicone” and “Gel” liners with the distal attachment system (pin system).

3-Prong or 4-Prong adapters should be laminated together with the socket. And while laminating, the M36 threads of the prongs should be covered with “plastic dummy part”. After the lamination, shuttle locks are free to be fixed with the sockets.

To release the pin, the white button should be pressed.

**CAUTION!**

It’s important to advise the patient that, to release the stump from the socket, patient should push his leg inside the socket firstly and then try to release the pin by pressing the button. So it will be released easily. On the other hand, if patient tries to take out his stump while pressing the button, system might lag and do not release the pin. So it’s important to push his/her stump in the socket before pressing the button. [See Fig 6., Fig 7.]

| Code | Weight | Material | Weight Limit |
|---|---|---|---|
| E 70-Body | 204 gr | Aluminum | 125 kg |
| E 70-Kit | 284 gr | | |
| E 70-09-Kit | 314 gr | | |

| Code | Weight | Material | Weight Limit |
|---|---|---|---|
| E 71-Body | 230 gr | Aluminum | 125 kg |
| E 71-Kit | 308 gr | | |
| E 71-09-Kit | 333 gr | | |

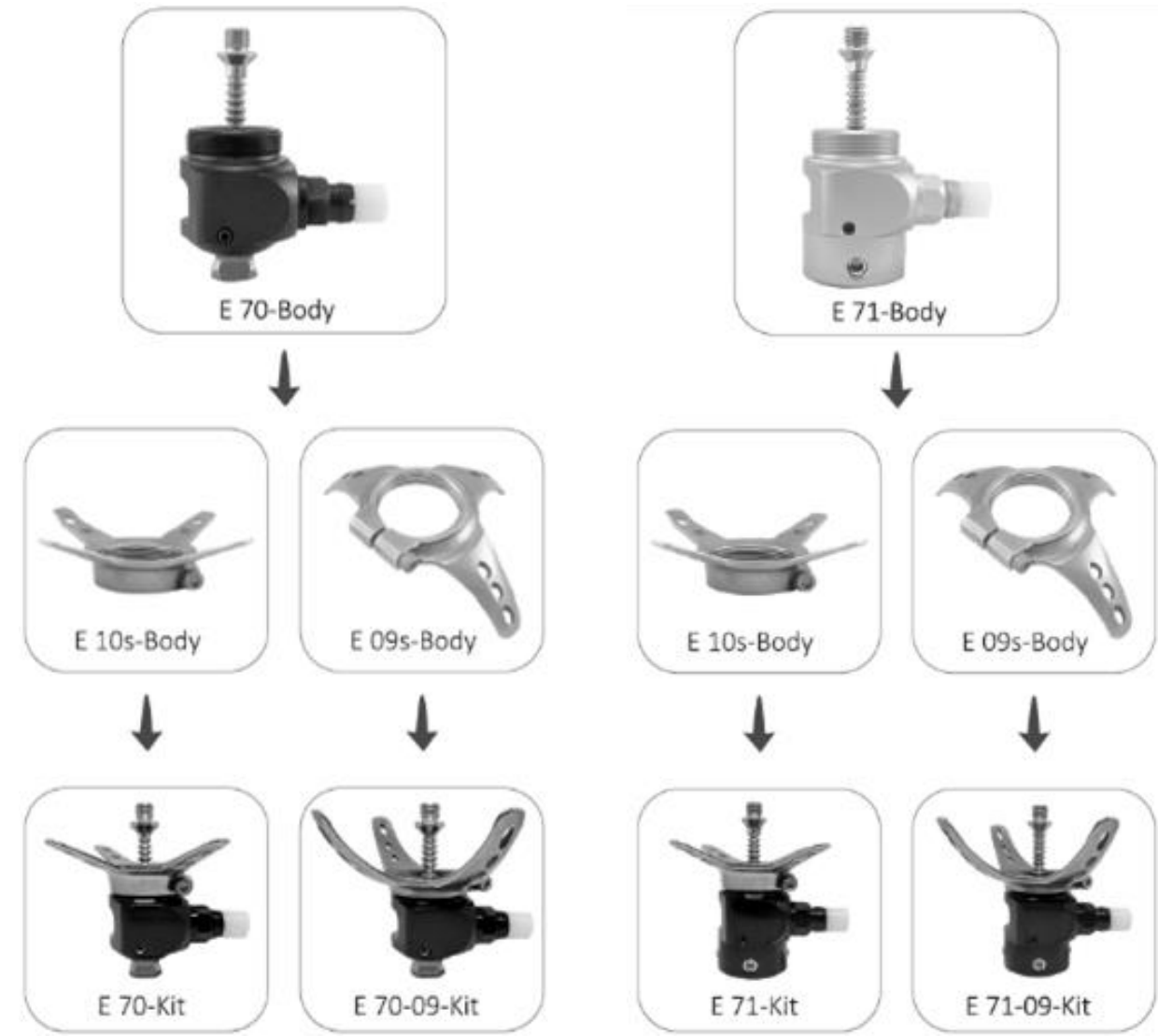


| Code | Ingredient | |
|---|---|---|
| E 70-Kit | E 70-Body | E 10s-Body |
| E 70-09-Kit | E 70-Body | E 09s-Body |
| E 71-Kit | E 71-Body | E 10s-Body |
| E 71-09-Kit | E 71-Body | E 09s-Body |

# 2.Assembly

- Advised torque levels for Set-Screws: **15 Nm**
- Advised torque level for M36 Thread Clamping Screw: **10 Nm**
- Advised torque levels for E70-Gear: **20 Nm**

[See Fig. 1, Fig.2]

Incorrect installation of bolt connections or loosening of bolt connections can cause injury. To avoid injury:

- Clean the bolt threads before each assembly.
- Apply the recommended tightening torques.

**CAUTION!**

Align the Shuttle lock with the longitudinal axis of the residual limb to prevent unnecessary load and wear.

**CAUTION!**

Misuse and extreme bending may cause cracking of connection.

**ATTENTION!**

When forming the pronged adapter, care must be taken to prevent distortion of the distal threads.

1) Isolate cast with PVA bag.
2) For initial lamination, apply suitable locating material.
3) Apply 50 mm single carbon tapes diagonally over the distal end of the model in the AP/ML direction.
4) Apply and laminate the outer PVA bag.
5) After hardening, remove PVA bag and roughen outer surface of lamination.
6) Attach the Adapter in correct alignment and rotation with putty.

7) Position the Lamination Cap on Adapter and secure it by locking the screw.
8) Apply clay to the tightening bolt and tightening bolt body to protect against resin.
9) Connect the 50mm carbon tapes to the grooves on the adapter, place in the AP/ML direction.
10) Apply material combinations appropriate to the user's weight and level of impact.
11) Layers of material can be cut to different lengths to provide a thinner, lighter proximal socket.
12) Connect the 50mm carbon tapes to the grooves on the adapter, place in the AP/ML direction.
13) Proceed with the appropriate placement material.
14) Laminate with 80:20 acrylic laminating resin.

# 3.Maintenance

- A visual inspection and functional test of the components should be performed after the first 30 days of use.
- Inspect the entire prosthesis for wear during normal consultations.
- Annual security checks should be implemented.

# 4.Scope of Delivery

| Title | Quantity | Code |
|---|---|---|
| Shuttle Lock Body | 1 | E 70-Body, E 71-Body |
| Lamination Anchor | 1 | E 10s-Body, E 09s-Body |
| Pin [See Fig 5.] | 1 | E 70-Pin |
| Dummy Set for Lamination (Delrin Bodies) [See Fig 3.] | 1 | SL-Kit |

# 5.Environmental Conditions

| Acceptable Environmental Conditions |
| --- |
| Temperature use range: -10 °C to +45°C |
| Humidity: Allowable relative humidity 20 % to 90 %, non-condensing |

| Unsuitable Environmental Conditions |
| --- |
| Mechanical vibrations, impacts |
| Dust, sand, fresh water, salt water, acids, sweat and urine |
| Cleaning agents containing solvents |

# 6.Service Life

The service life of the product is about 3 years. This duration depends on the daily activity of the user.

# 7.General Safety Instructions

| |
| --- |
| **CAUTION!**<br>To avoid the risk of injury and product damage, do not use for longer than the service life of the product. |
| Avoid using this product in unsuitable environmental conditions. If the product has been exposed to unsuitable environmental conditions, check for damage. |
| Do not use the product that is damaged, has limited functionality or is in doubtful condition. Ensuring that appropriate measures are taken (e.g. control, cleaning, repair, replacement by the authorized workshop or manufacturer). |
| To prevent mechanical damage, be careful and caution when working the product. |
| Use the product for a single patient to avoid injuries and product damage. |
| Products should be used in appropriate combinations. Using the product with unsuitable combinations may result in possible injury. |

| |
|---|
| In case of feeling any space or sound, apply the rehabilitation center who installed the foot. |
| Abstain bending the anchor arms too strongly or too often. Avoid forcing the anchor arms too much. It may cause injury due to breakage. |

# 8.Warranty

IB-ER company provides the warranty for the products in case of material and production flaws. Warranty duration for the above-mentioned products are individually mentioned at below.

| **Duration After the IB-ER Invoice Date** | **Product Code** | |
|---|---|---|
| 18 Months | E 70-Body | E 71-Body |
| | E 70-Kit | E 71-Kit |
| | E 70-09-Kit | E 71-09-Kit |

This warranty covers on only replacement and repair of failed products after assemblies performed by qualified individuals and competent institutions. This warranty is not applicable in case of following points:

- Improper use of the product, using with unsuitable conditions and fault assembly.
- Issues arising from replacement of our products with other products.

İB-ER®
PROSTHETIC

İB-ER Makina A.Ş
Selvilitepe OSB Mah. OSB 2006. Cad. No: 13/1
45400, Turgutlu - Manisa / Turkey

**Phone : +90 (236) 312 32 00**
**Fax : +90 (236) 312 32 06**
**info@ib-er.com**
**www.ib-er.com**

EC REP

Ercan Gozuacik
Reinickendorfer Str 45 13347 Berlin GERMANY
(for regulatory affairs only)